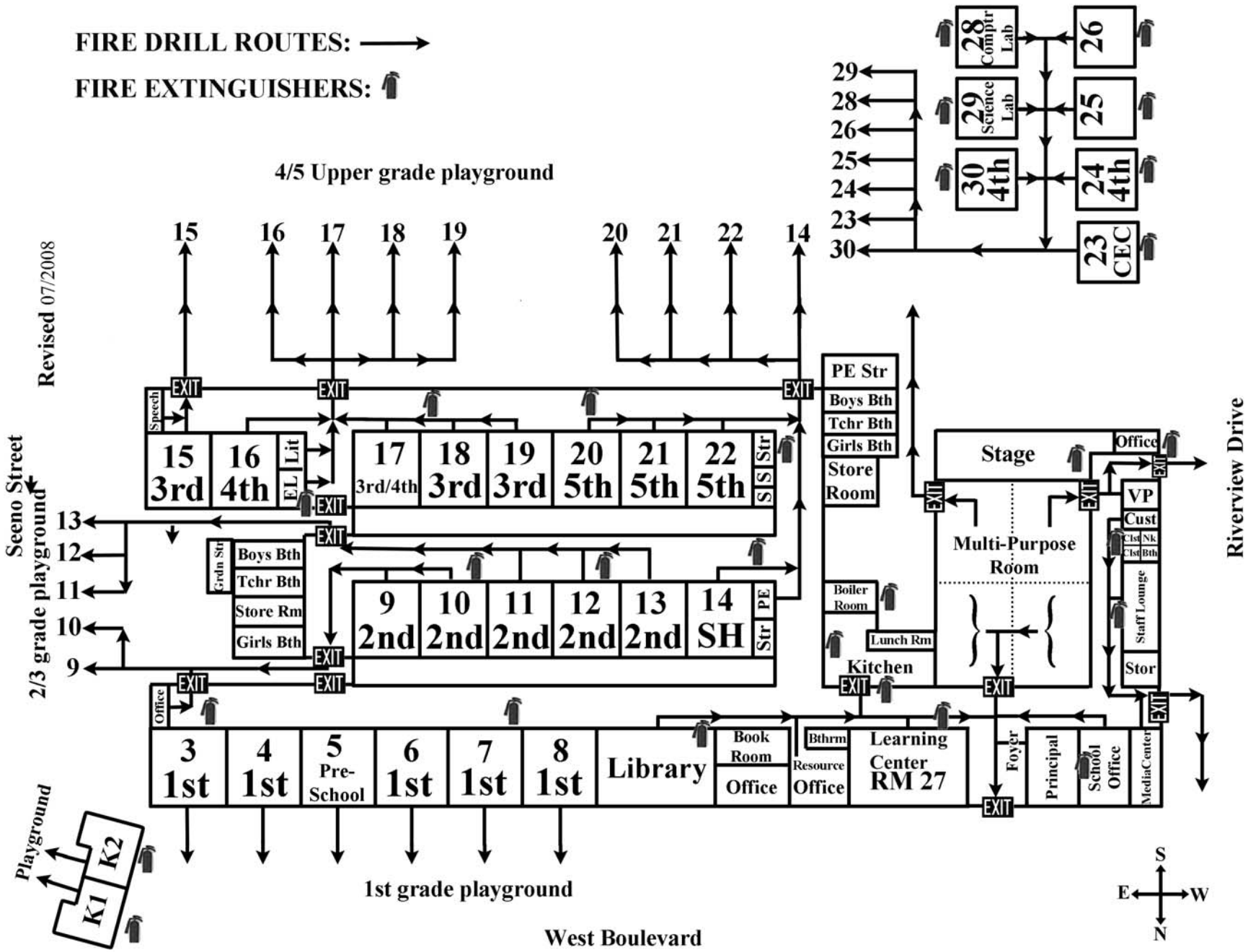
FIRE DRILL ROUTES:
FIRE EXTINGUISHERS:
Revised 07/2008
4/5 Upper grade playground
Seeno Street
2/3 grade playground
Riverview Drive
1st grade playground
West Boulevard
Playground
K1
K2
15 3rd
16 4th
17 3rd/4th
18 3rd
19 3rd
20 5th
21 5th
22 5th
9 2nd
10 2nd
11 2nd
12 2nd
13 2nd
14 SH
3 1st
4 1st
5 Pre-School
6 1st
7 1st
8 1st
23 CEC
24 4th
25
26
28 Comptr Lab
29 Science Lab
30 4th
Speech
EL
Lit
Grdn Str
Boys Bth
Tchr Bth
Store Rm
Girls Bth
Office
Str
S
PE
PE Str
Boys Bth
Tchr Bth
Girls Bth
Store Room
Boiler Room
Lunch Rm
Kitchen
Stage
Multi-Purpose Room
Office
VP
Cust
Cl st
Nk
Cl st
Bth
Staff Lounge
Stor
Library
Book Room
Office
Resource Office
Bthrm
Learning Center RM 27
Foyer
Principal
School Office
MediaCenter
EXIT
S
E
W
N